Digital Electronic Circuits (EC2L004)

Lecture 9: Combinational Logic – Part II

Multiplexers/Data selectors

- A multiplexer is a combinational circuit that selects binary information from one of many input lines and directs it to a single output line.
  - The selection of a particular input line is controlled by a set of selection lines.
  - Normally, there are 2^n input lines and n selection lines whose bit combinations determine which input is selected.

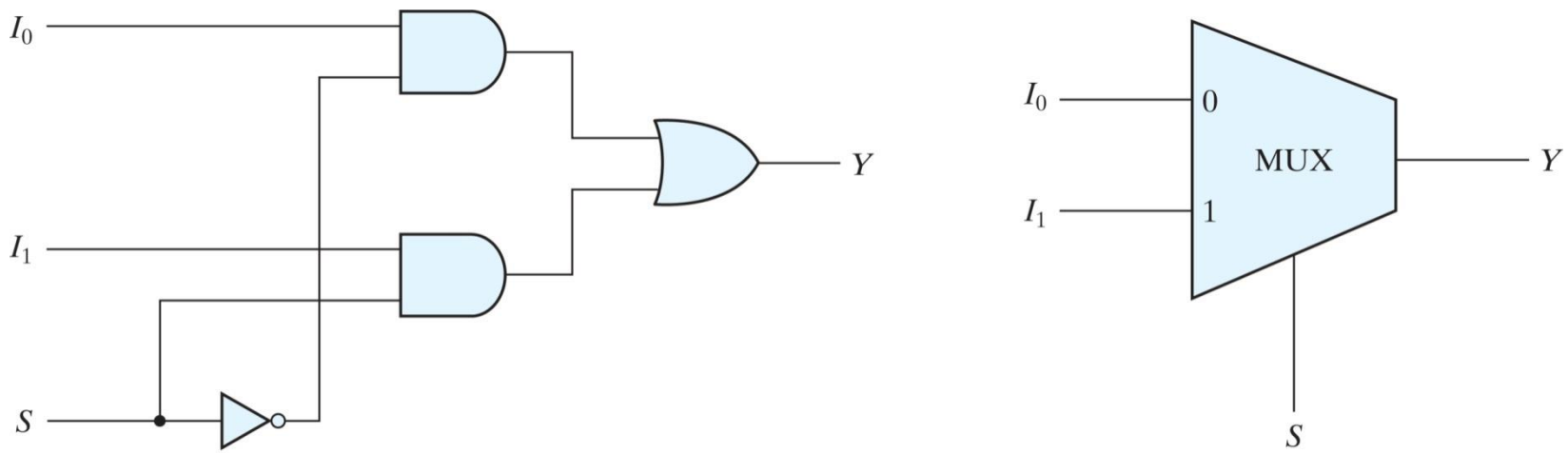

(a) Logic diagram (b) Block diagram

4x1 multiplexer

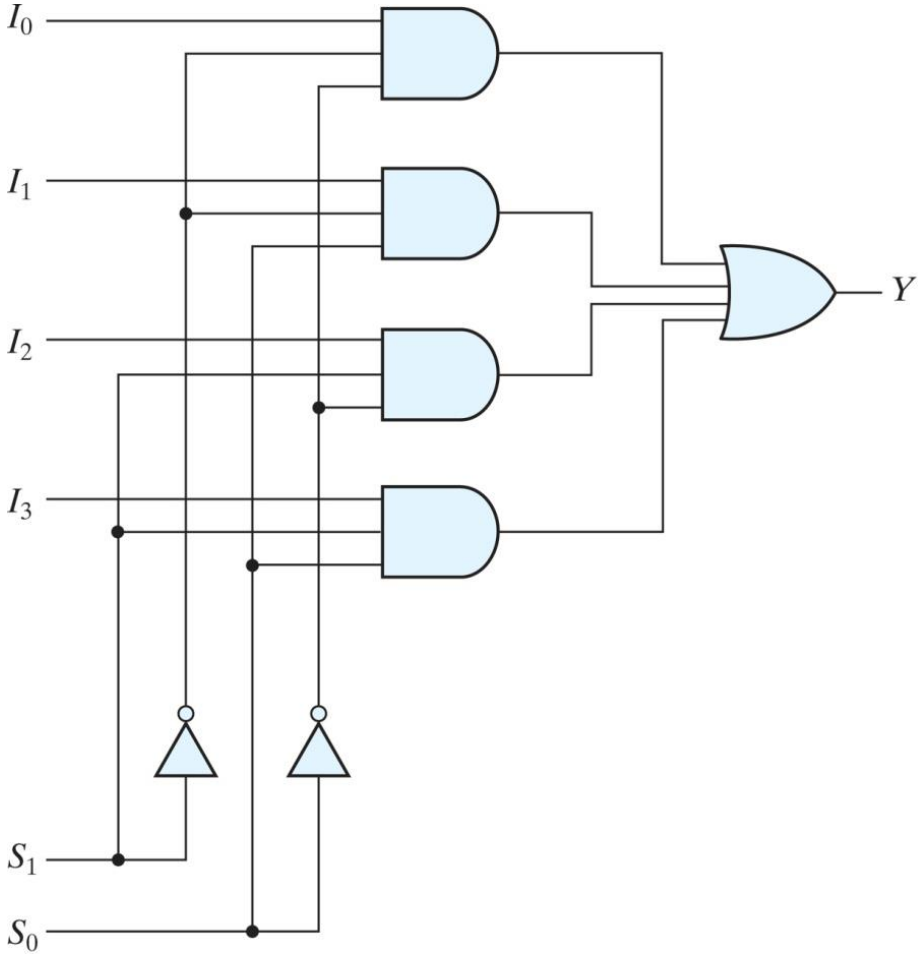

(a) Logic diagram

S_1	S_0	Y
0	0	I_0
0	1	I_1
1	0	I_2
1	1	I_3

(b) Function table

Quadruple two-to-one-line multiplexer

- Multiplexer circuits can be combined with common selection inputs to provide multiple-bit selection logic.

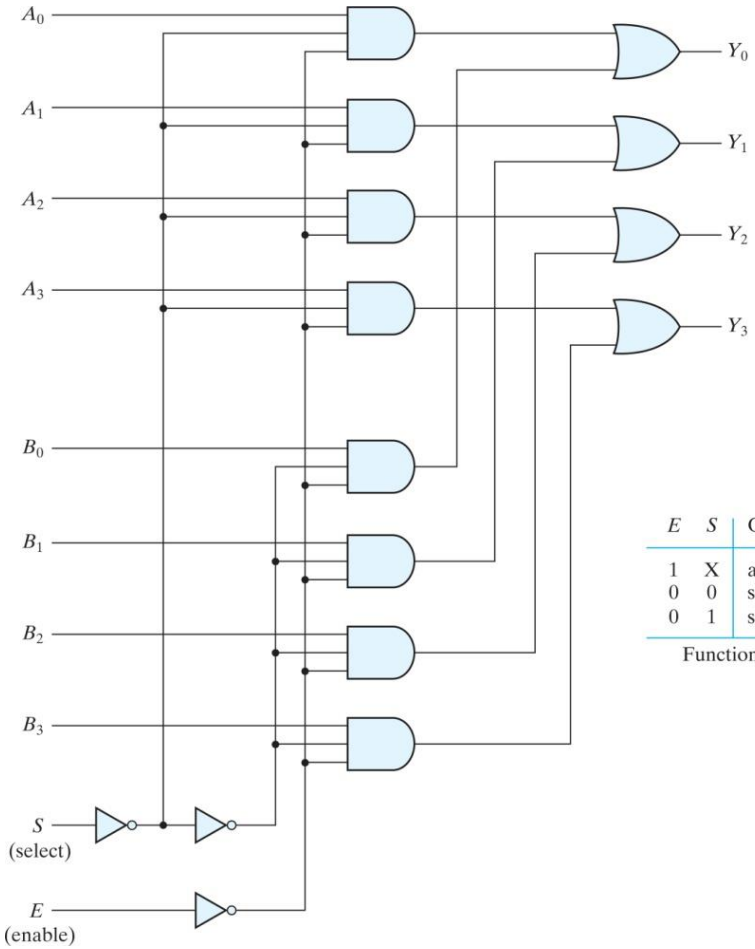

E	S	Output Y
1	X	all 0's
0	0	select A
0	1	select B

Function table

Boolean Function Implementation

- Implement the following function using 8x1 mux and also with 4x1 mux.

$$F(x, y, z) = \sum(1, 2, 6, 7)$$

x	y	z	F	
0	0	0	0	$F = z$
0	0	1	1	
0	1	0	1	$F = z'$
0	1	1	0	
1	0	0	0	$F = 0$
1	0	1	0	
1	1	0	1	$F = 1$
1	1	1	1	

(a) Truth table

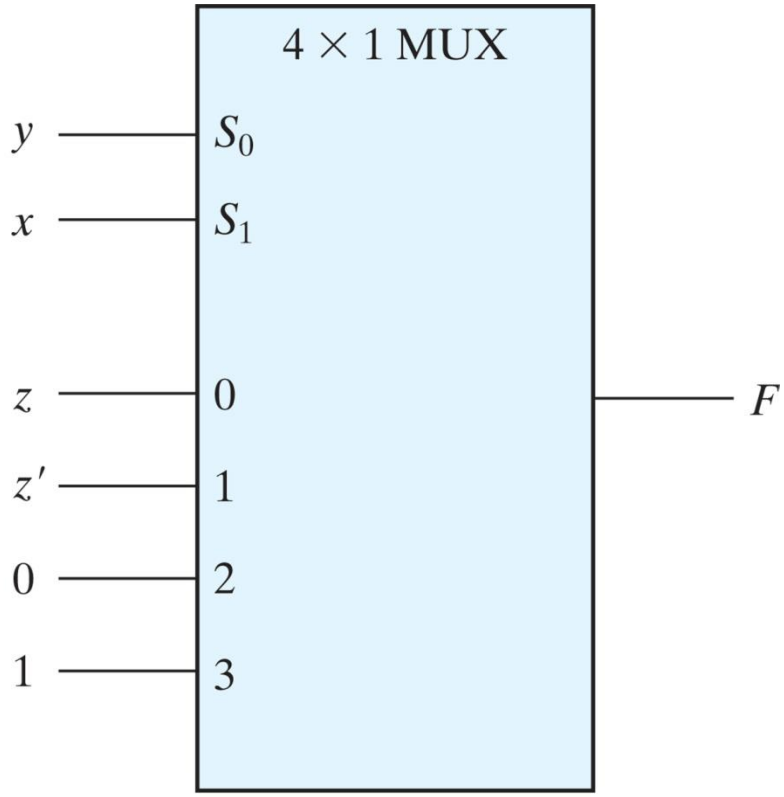

(b) Multiplexer implementation

Boolean Function Implementation

- Implement the following function using 8x1 mux

$$F(A, B, C, D) = \sum(1, 3, 4, 11, 12, 13, 14, 15)$$

A	B	C	D	F	
0	0	0	0	0	$F = D$
0	0	0	1	1	
0	0	1	0	0	$F = D$
0	0	1	1	1	
0	1	0	0	1	$F = D'$
0	1	0	1	0	
0	1	1	0	0	$F = 0$
0	1	1	1	0	
1	0	0	0	0	$F = 0$
1	0	0	1	0	
1	0	1	0	0	$F = D$
1	0	1	1	1	
1	1	0	0	1	$F = 1$
1	1	0	1	1	
1	1	1	0	1	$F = 1$
1	1	1	1	1	

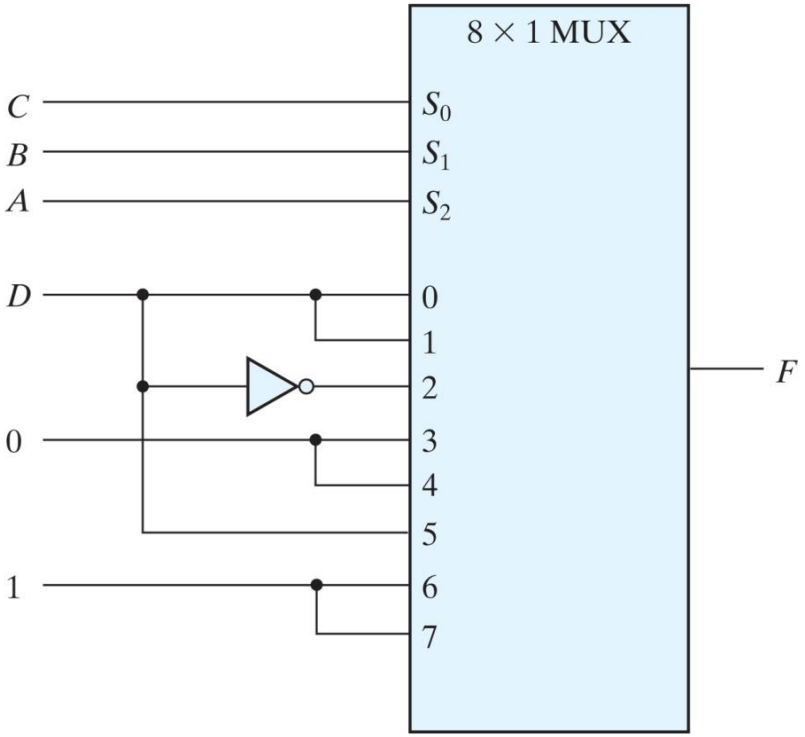

Boolean Function Implementation: Summary

- Step 1: Complete the truth table from the SOP.
- Step 2: The first $n - 1$ variables in the table are applied to the selection inputs of the multiplexer.
- Step 3: For each combination of the selection variables, we evaluate the output as a function of the last variable.
- Step 4: Apply these values to the data input in proper order.

Demultiplexer

- Multiplexer (MUX)
  - Routes one of many inputs to a single output
  - Also called a *selector*

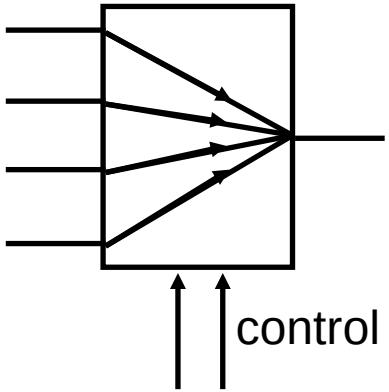

- Demultiplexer (DEMUX)
  - Single data input; n control inputs (“selects”); 2^n outputs
    - Single input connects to one of 2^n outputs
    - “Selects” decide which output is connected to the input

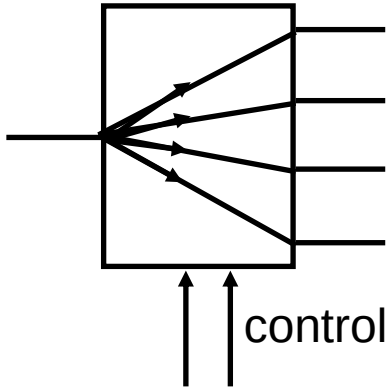

3x8 Demux

- The input is called an “enable” (G)

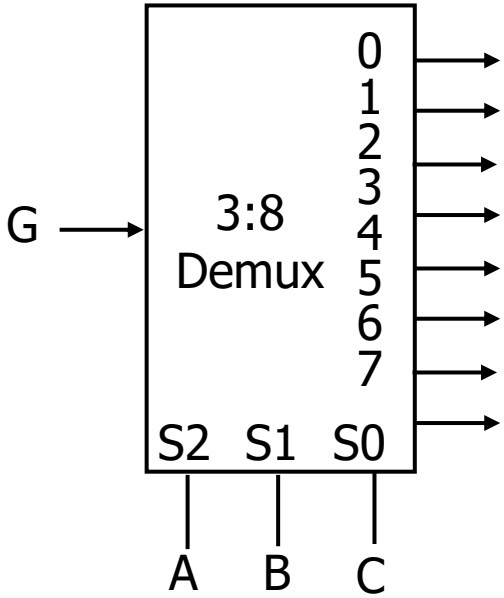

3:8 Decoder:

Out0 = G • S2' • S1' • S0'
Out1 = G • S2' • S1' • S0
Out2 = G • S2' • S1 • S0'
Out3 = G • S2' • S1 • S0
Out4 = G • S2 • S1' • S0'
Out5 = G • S2 • S1' • S0
Out6 = G • S2 • S1 • S0'
Out7 = G • S2 • S1 • S0

Demultiplexers: Implemtation

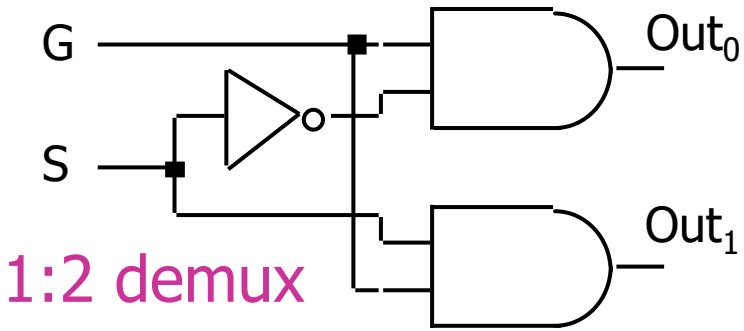

1:2 demux

1:2 Decoder:

Out0 = G • S'

Out1 = G • S

2:4 Decoder:

Out0 = G • S1' • S0'

Out1 = G • S1' • S0

Out2 = G • S1 • S0'

Out3 = G • S1 • S0

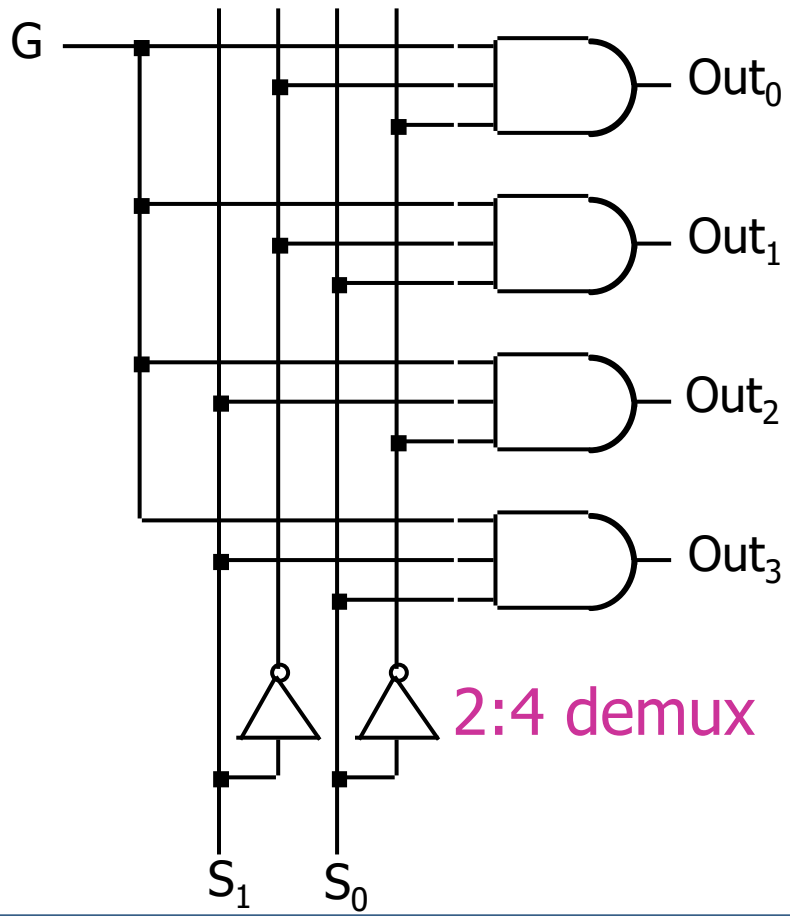

2:4 demux

Demultiplexer as logic block

- A n:2^n demux can implement any function of n variables
  - Use variables as select inputs
  - Tie enable input to logic 1
  - Sum the appropriate minterms (extra OR gate)

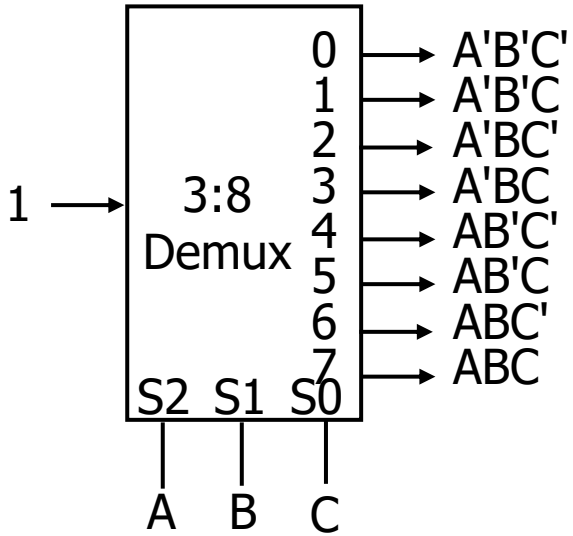

demultiplexer "decodes" appropriate minterms from the control signals

Demultiplexer as logic block

F1 = A'BC'D + A'B'CD + ABCD

F2 = ABC'D' + ABC

F3 = (A'+B'+C'+D')

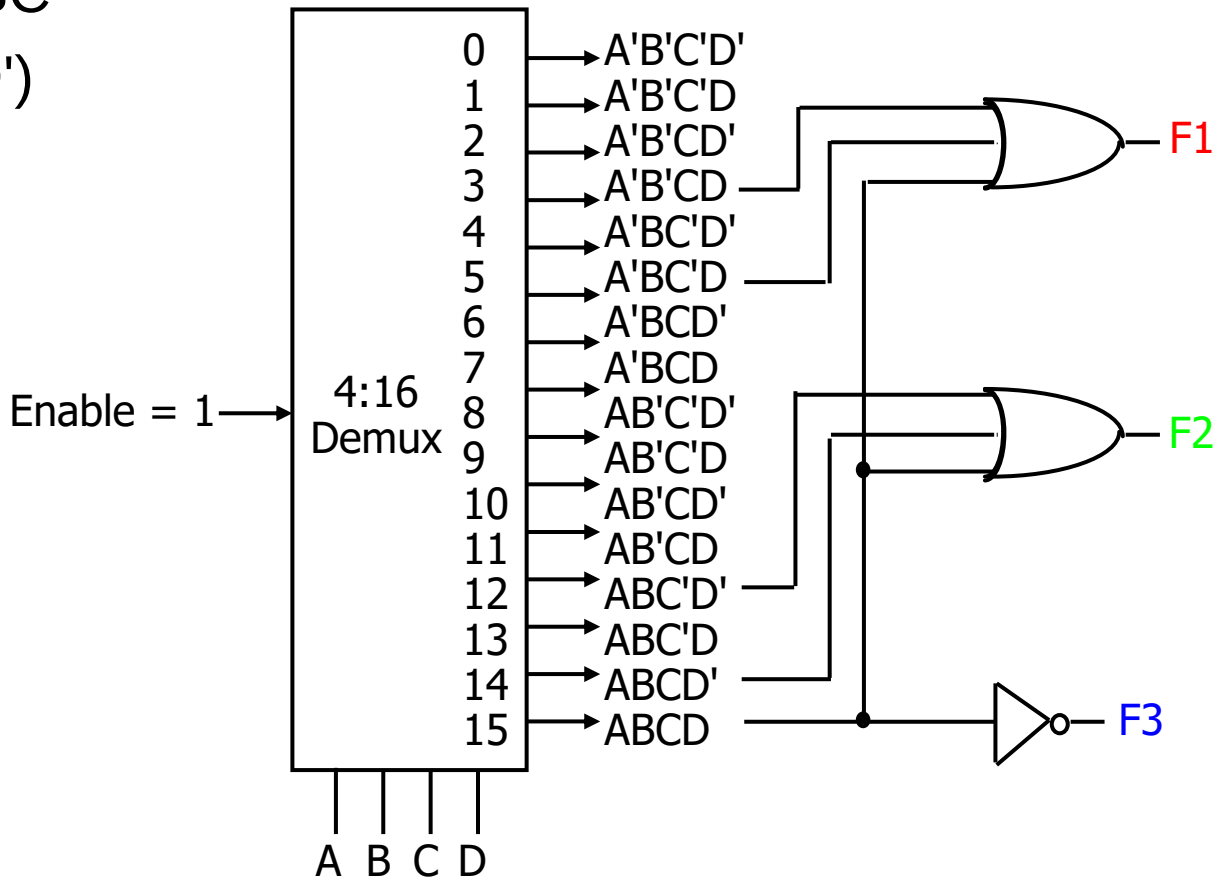

Cascading demultiplexers

- 5:32 demux

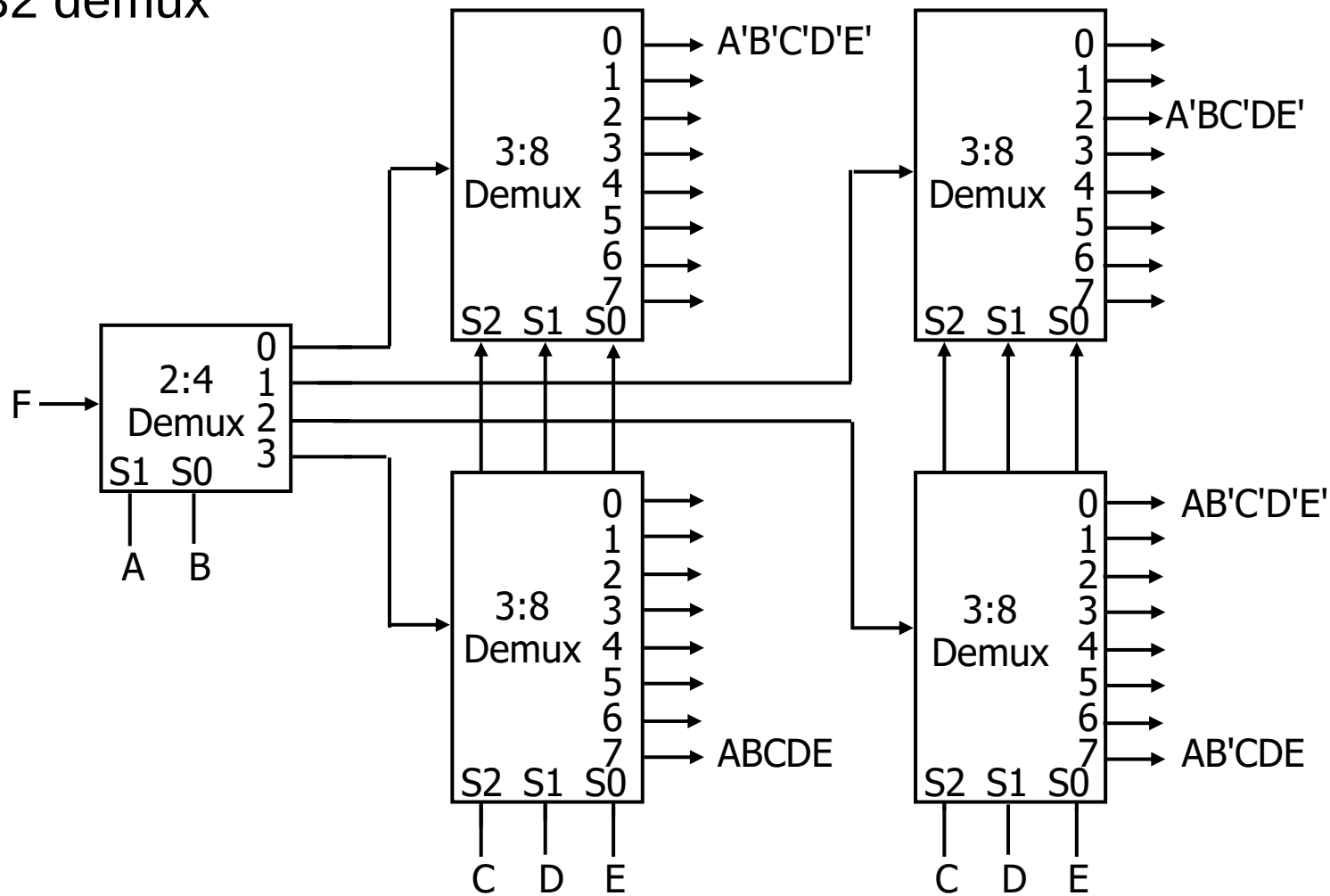

Decoders

- A decoder is a combinational circuit that converts binary information from *n* input lines to an 2^n unique output lines.

- Some Applications:
  - Microprocessor memory system: selecting different banks of memory.
  - Microprocessor I/O: Selecting different devices.
  - Memory: Decoding memory addresses (e.g. in ROM).

Three-to-Eight Line Decoder

Truth Table of a Three-to-Eight-Line Decoder

Inputs			Outputs							
x	y	z	D_0	D_1	D_2	D_3	D_4	D_5	D_6	D_7
0	0	0	1	0	0	0	0	0	0	0
0	0	1	0	1	0	0	0	0	0	0
0	1	0	0	0	1	0	0	0	0	0
0	1	1	0	0	0	1	0	0	0	0
1	0	0	0	0	0	0	1	0	0	0
1	0	1	0	0	0	0	0	1	0	0
1	1	0	0	0	0	0	0	0	1	0
1	1	1	0	0	0	0	0	0	0	1

Three-to-Eight Line Decoder

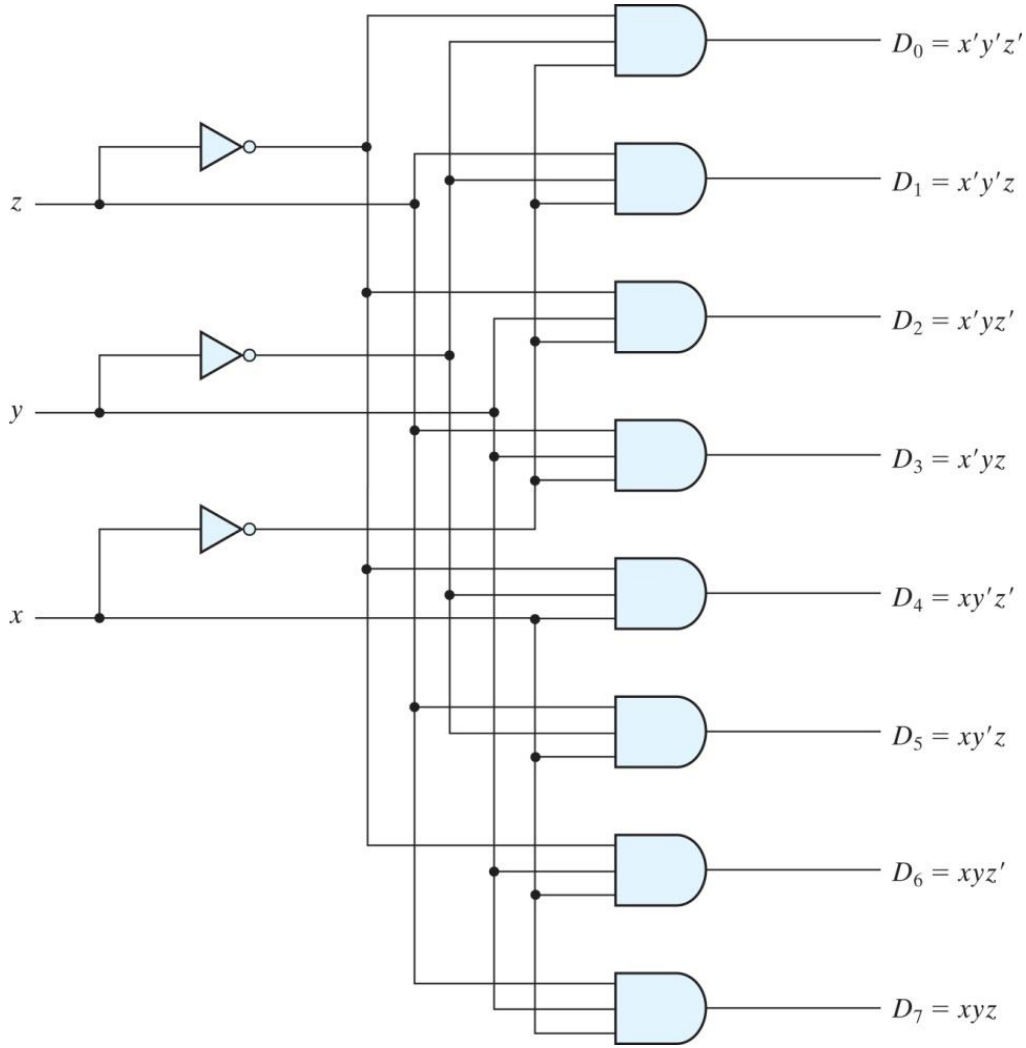

2-to-4-line DECODER with Enable

- The decoder is enabled when *E* = 0. The output whose value = 0 represents the minterm is selected by inputs *A* and *B.*

- The decoder is inactive when *E* = 1 -> *D*0 …*D*3 = 1
  - A Decoder with enable input is called a decoder/demultiplexer.
- Demultiplexer receives information from a single line and directs it to the output lines.

E	A	B	D_0	D_1	D_2	D_3
1	X	X	1	1	1	1
0	0	0	0	1	1	1
0	0	1	1	0	1	1
0	1	0	1	1	0	1
0	1	1	1	1	1	0

2-to-4-line DECODER with Enable

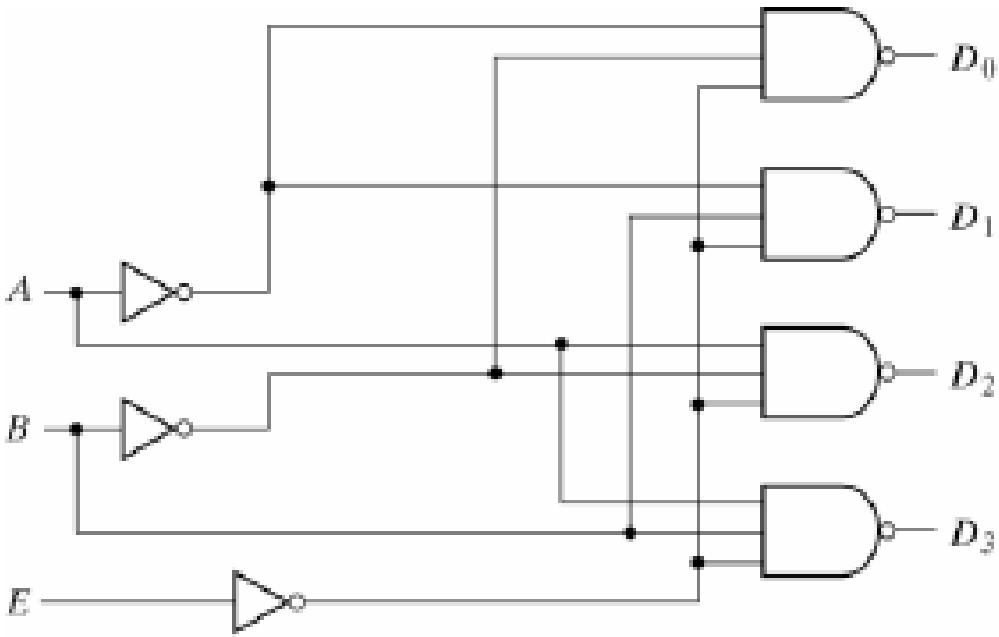

(a) Logic diagram

Complemented outputs

E	A	B	D_0	D_1	D_2	D_3
1	X	X	1	1	1	1
0	0	0	0	1	1	1
0	0	1	1	0	1	1
0	1	0	1	1	0	1
0	1	1	1	1	1	0

(b) Truth table

4x16 decoder with two 3x8 decoders

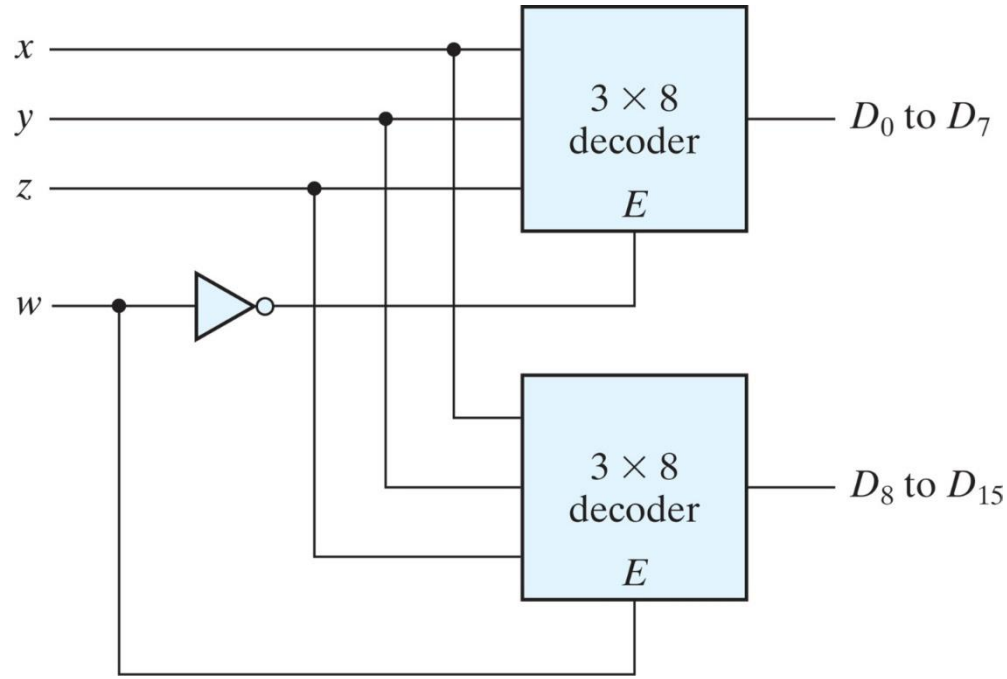

- When *w* = 0, the top decoder is enabled and the bottom is disabled.
  - Top decoder generates 8 minterms 0000 to 0111, while the bottom decoder outputs are 0's.
- When *w* = 1, the top decoder is disabled and the bottom is enabled.
  - Bottom decoder generates 8 minterms 1000 to 1111, while the top decoder outputs are 0's.

Implementation of Full Adder using 3x8 Decoder

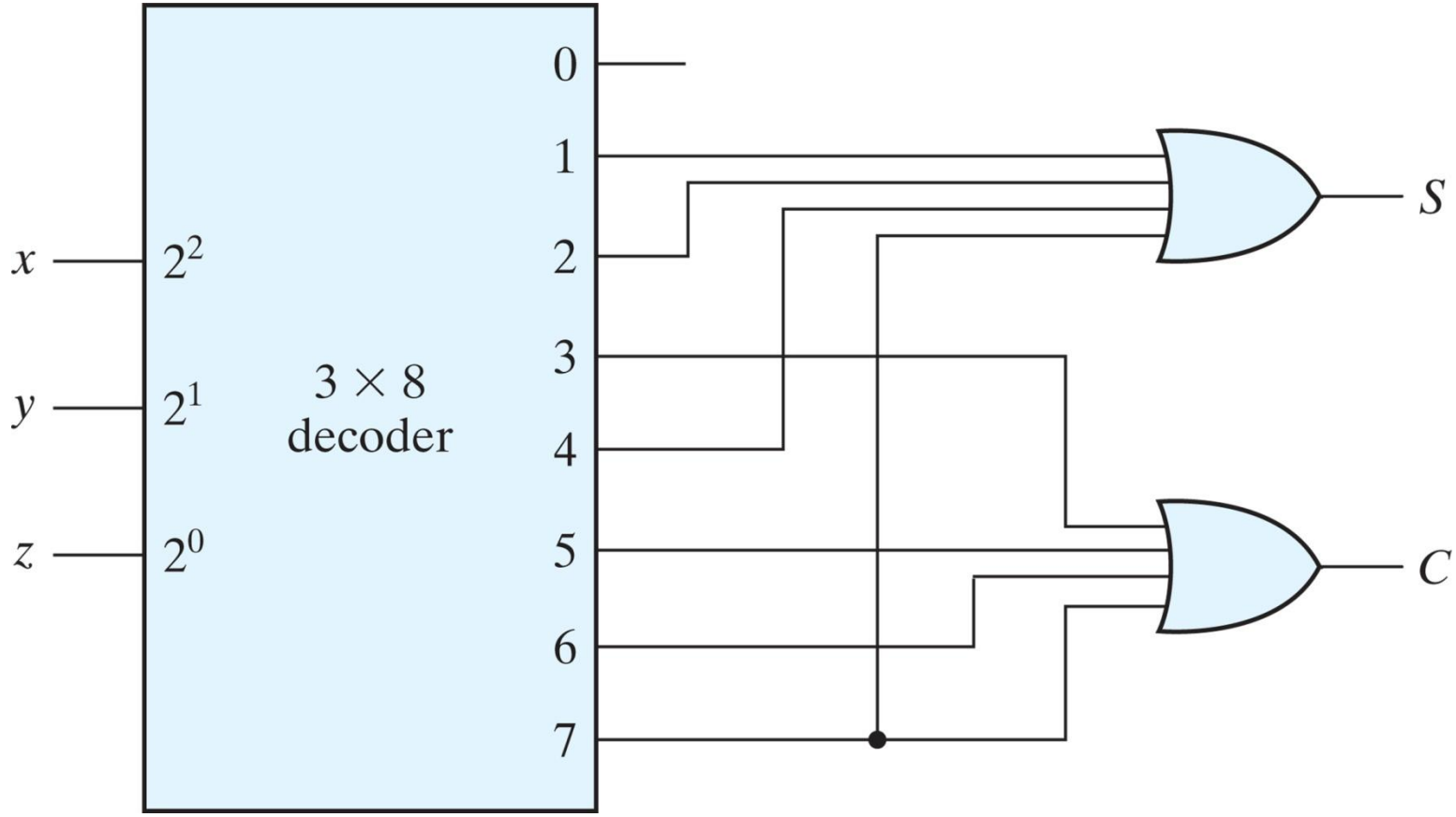

$S(x, y, z) = \sum(1, 2, 4, 7)$

$C(x, y, z) = \sum(3, 5, 6, 7)$

Encoders

- An encoder is a digital circuit that performs the inverse operation of a decoder. An encoder has 2^n (or fewer) input lines and *n* output lines.

Truth Table of an Octal-to-Binary Encoder

Inputs								Outputs		
D_0	D_1	D_2	D_3	D_4	D_5	D_6	D_7	x	y	z
1	0	0	0	0	0	0	0	0	0	0
0	1	0	0	0	0	0	0	0	0	1
0	0	1	0	0	0	0	0	0	1	0
0	0	0	1	0	0	0	0	0	1	1
0	0	0	0	1	0	0	0	1	0	0
0	0	0	0	0	1	0	0	1	0	1
0	0	0	0	0	0	1	0	1	1	0
0	0	0	0	0	0	0	1	1	1	1

- It is assumed that only one input has a value of 1 at any given point in time.

Encoders (Contd.)

- The encoder can be implemented with OR gates whose inputs are determined directly from the truth table.

$$z = D_1 + D_3 + D_5 + D_7$$
$$y = D_2 + D_3 + D_6 + D_7$$
$$x = D_4 + D_5 + D_6 + D_7$$

- Two problems
  - What if two inputs are active simultaneously?
  - Output with all 0's generated when all the inputs are 0; but this same as when D_0 is equal to 1.

Priority Encoder

- A priority encoder is an encoder circuit that includes the priority function. The operation of the priority encoder is such that if two or more inputs are equal to 1 at the same time, the input having the highest priority will take precedence.

Truth Table of a Priority Encoder

Inputs				Outputs		
D_0	D_1	D_2	D_3	x	y	V
0	0	0	0	X	X	0
1	0	0	0	0	0	1
X	1	0	0	0	1	1
X	X	1	0	1	0	1
X	X	X	1	1	1	1

- Input D_3 has the highest priority.

Priority Encoder (Contd.)

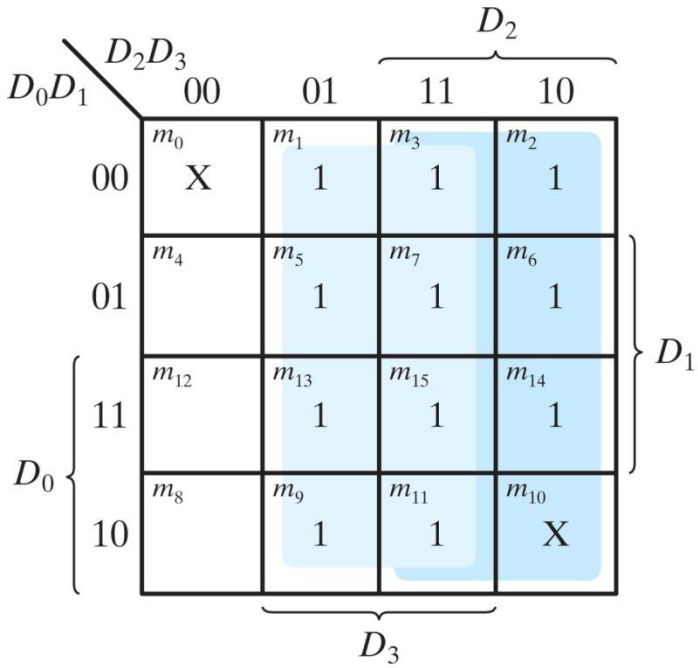

$x = D_2 + D_3$

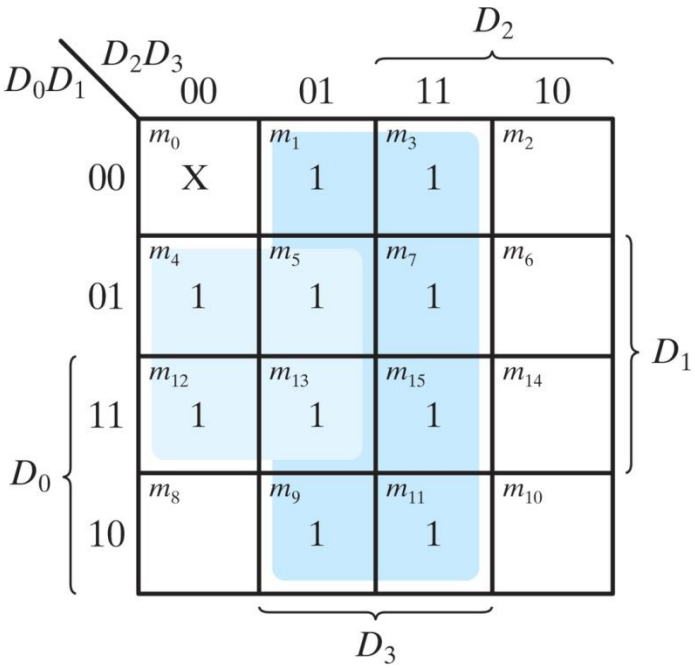

$y = D_3 + D_1D'_2$

Priority Encoder (Contd.)

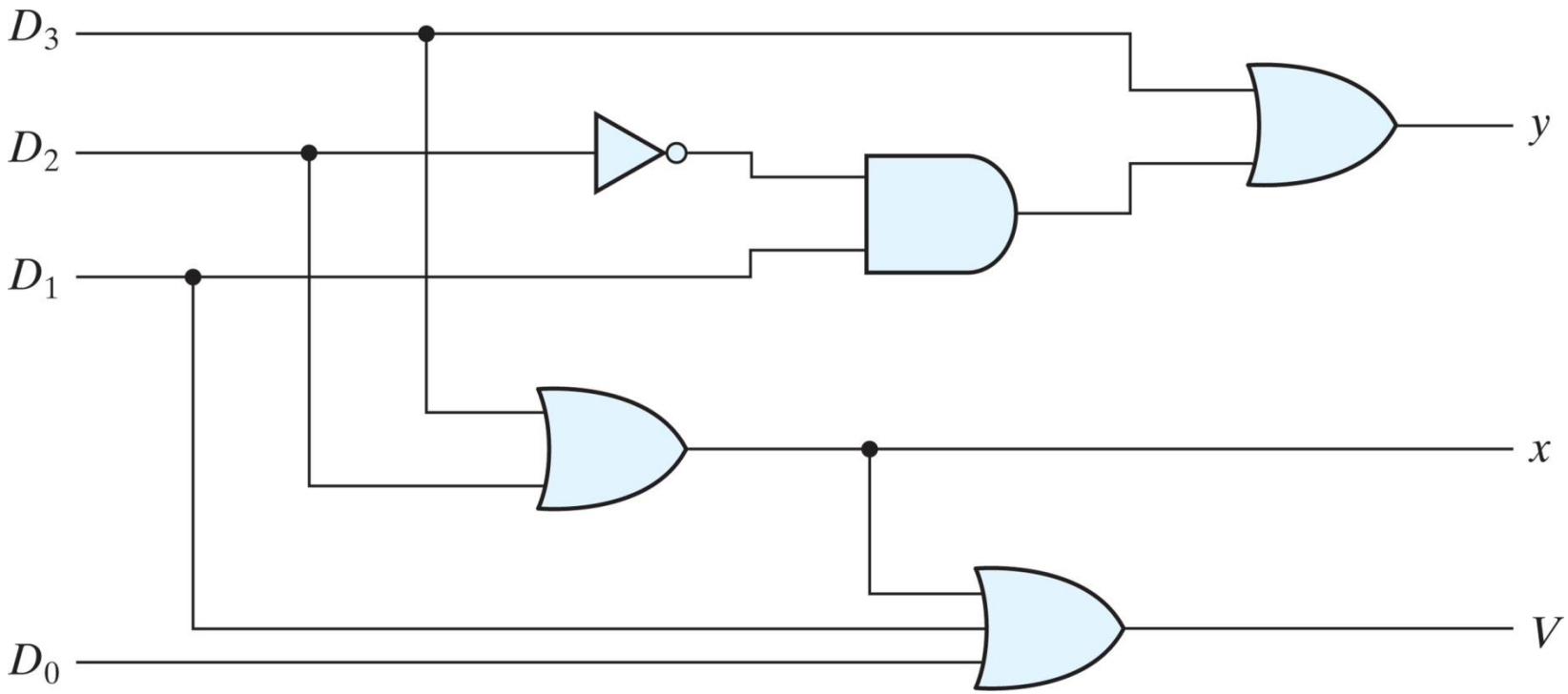

$$x = D_2 + D_3$$

$$y = D_3 + D_1 D_2'$$

$$V = D_0 + D_1 + D_2 + D_3$$

- Disclaimer: Demultiplexer slides are copied from different open sources on the internet, and I do not claim the ownership of these slides.